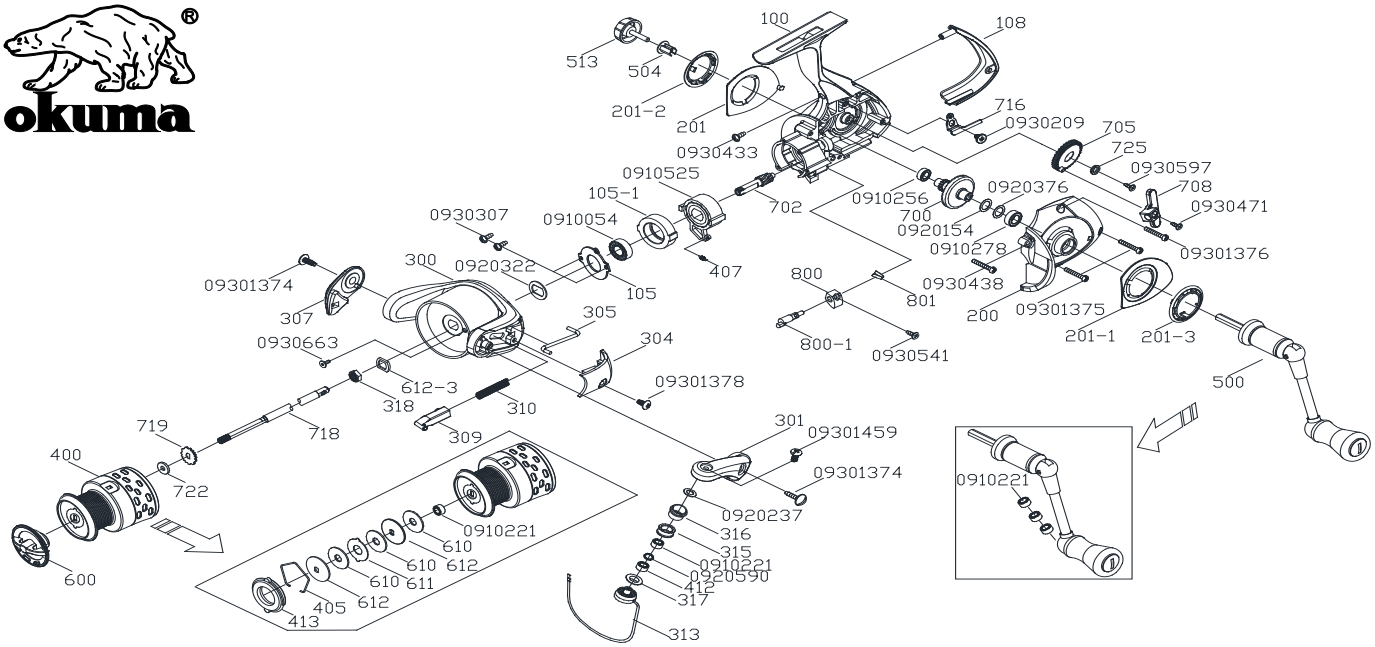

Hx-25s PARTS LIST

KEY NO	PARTS NO	PARTS NAME	KEY NO	PARTS NO	PARTS NAME
100	21004166	MIAN BODY	702	27020761	PINION GEAR
105	21050012	PINION BEARING FIXED BUSHING	705	27050158	TRANSMISSION GEAR
105-1	21056571	PINION BEARING FIXED PLATE	708	27080167	OSCILLATING SLIDER
108	21081450	CAP	716	27160008	OSCILLATION SLIDER PLATE
200	22004321	SIDE PLATE	718	27180746	MAIN SHAFT
201	22010417	MIAN BODY DECORATION	719	27190025	CLICK GEAR
201-1	22010418	SIDE PLATE DECORATION	722	27220009	CLICK GEAR WASHER
201-2	22010443	MAIN BODY DECORATION	725	27250023	TRANSMISSION GEAR
201-3	22010444	SIDE PLATE DECORATION	800-1	28000324	ANTI-REVERSE/ANTI-RE LEVER
300	23004952	ROTOR	800	28000332	ANTI-REVERSE/ANTI-RE LEVER
301	23012228	BAIL ARM	801	28010024	ANTI-RE LEVER SPRING
304	23042611	BAIL ARM COVER	0910221	0910221	BALL BEARING
305	23050177	KICK LEVER	0910256	0910256	BALL BEARING
307	23071529	BAIL HOLDER	0910278	0910278	BALL BEARING
309	23090002	BAIL ARM SLIDER	0910054	0910054	BALL BEARING
310	23100005	COMPRESSION SPRING	0910525	0910525	BALL BEARING
313	23131571	BAIL WIRE ASSY.	0920154	0920154	WASHER
315	23150086	LINE ROLLER	0920590	0920590	WASHER
316	23160014	LINE ROLLER BUSHING	0920322	0920322	WASHER
317	23170014	LINE ROLLERWASHER	0920376	0920376	WASHER
318	23180005	ROTOR NUT	0920237	0920237	WASHER
400	240013790	SPOOL ASSY.	09301375	09301375	SCREW
405	24050042	DRAG WASHER RETAINER	09301376	09301376	SCREW
407	24070009	EXTENSION SPRING	09301378	09301378	SCREW
412	24120038	SPOOL BUSHING	09301459	09301459	SCREW
413	24130009	WATERPROOF RETAINER	0930209	0930209	SCREW
500	25005654	HANDLE ASSY.	0930307	0930307	SCREW
504	25040004	HANDLE SCREW CAP WASHER	0930438	0930438	SCREW
513	25130826	HANDLE CAP ASSY.	0930471	0930471	SCREW
600	26003787	DRAG KNOB ASSY.	0930541	0930541	SCREW
610	26100109	DRAG WASHER	0930597	0930597	SCREW
611	26110005	EARED WASHER	0930663	0930663	SCREW
612	26120007	KEY WASHER	09301374	09301374	SCREW
612-3	26120032	KEY WASHER	0930433	0930433	SCREW
700	27002038	DRIVE GEAR			

209OKA09304251